Single-ended cordset, Food & Beverage, M8x1

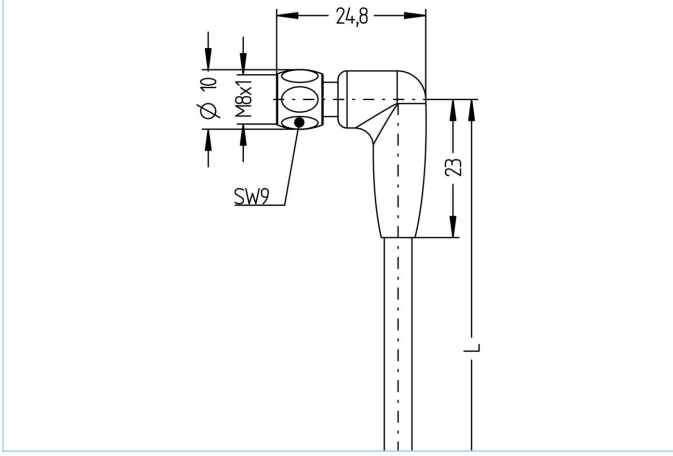

Product data	
Item description	FB-SWKPH4-10/S3930
Item-No.	8058578
Length	10m
Customs tariff-No.	85444290
Step-File	FB-SWKPH4.stp
EAN	4047106142001

Technical data	
Connector	female, angled, M8x1
Number of pins	4
Pin assignment	1 BN, 2 WH, 3 BU, 4 BK
Rated voltage	60V
Current load (at 40°C)	4A
Insulation resistance	≥10^8Ω
Ambient temperature product	-40°C...+105°C
Contact material	Metal, CuZn, gold-plated
Contact-carrier material	Plastic, PP, GY
Grip body material	Plastic, PP, GY
Coupling nut material	Stainless steel, V4A
Sealing (female) material	EPDM
Standards	IEC 61076-2-104
Degree of protection (mounted)	IP65, IP67, IP68, IP69
Mechanical life-cycle	>100 mating cycles
Cable end assembly	open cable end
Degree of pollution	3/2

The information contained in this data sheet was compiled with the utmost care. The liability for the correctness, completeness and timelines is limited to gross negligence.

Cable	TPE, S3930, GY

TPE jacketed cable with elevated position-proof wires with an insulation of special polyester. Resistant to all common acidic- and alkaline cleaning- and disinfection agents. PVC-free plastics prevent discoloration and hardening by detergents. Predestined for applications in the food- and beverage industry. Due to the materials used, it is also suitable for applications in machine- and plant construction. High stability, good drag-chain- and torsion capability.

Outer diameter of jacket	4,60 mm
Cable-jacket material	TPE
Jacket color	GY, similar RAL7035
Wire cross-section	4 x 0.34 mm²
Wire insulation material	TPE
Wire colors	BN, WH, BU, BK
Conductor structure	42 x 0.10 mm
Bending radius (fixed)	5 x Ø-cable
Bending radius (repeated)	10 x Ø-cable
Temperature range (repeated)	-25°C...+105°C
Temperature range (fixed)	-40°C...+105°C
Temperature range (drag chain)	-25°C…+60°C
Halogen-free	Yes
Rated voltage cable	≤240 VAC
Special features	seawater resistant, recyclable, LABS free, RoHs compliant, ozone resistant, hydrolysis proof, drag chain-adapted, torsion resistant, halogen free, excellent acid- and alkali resistant, verified resistance against P3-topactive, flexibility at low temperature, increased thermal load

Classification	
eCl@ss 6.0	27279218
eCl@ss 7.0	27279218
eCl@ss 8.0	27279218
eCl@ss 9.0	27060311
ETIM 5.0	EC001855
ETIM 6.0	EC001855

Accessories	Web-Link
Mounting-set, M8x1	https://www.escha.net/en/search?sSearch=8047663
Torque-wrench set	https://www.escha.net/en/search?sSearch=8055431
Marking rings Ø 9mm	https://www.escha.net/en/products/accessoires/marking-rings/
Cable Stripping Tool	https://www.escha.net/en/search?sSearch=8066216
Cable Stripping Tool	https://www.escha.net/en/search?sSearch=8066215

The information contained in this data sheet was compiled with the utmost care. The liability for the correctness, completeness and timelines is limited to gross negligence.