Single-ended cordset, Double-Valve connector

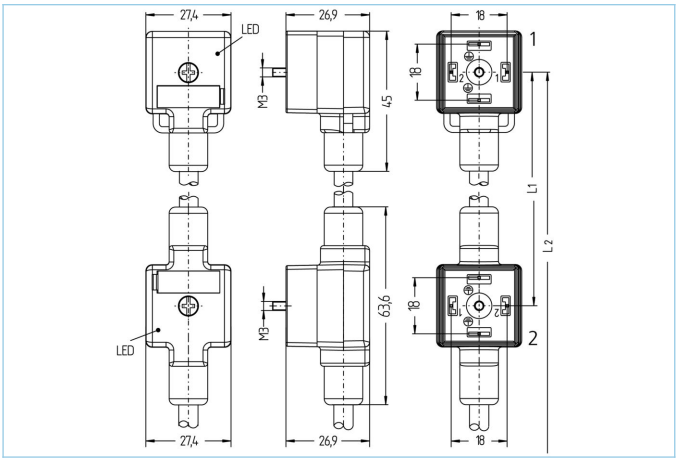

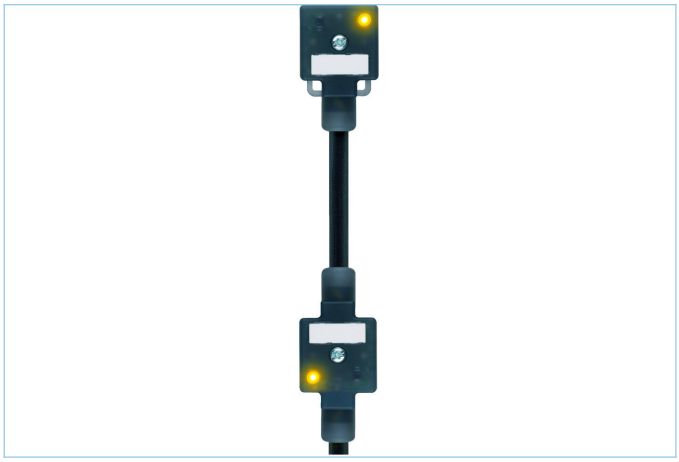

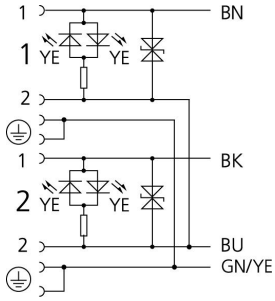

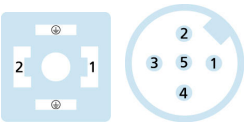

Product data	
Item description	VA22-24.3-0,4-DA22-24.3-10/S370
Item-No.	8055748
Length	10m
Distance of valve connectors	0.40m
Customs tariff-No.	85444290
Step-File	VA22-24_3-L-DA22-24_3-m_S_.stp
EAN	4047106140755

The information contained in this data sheet was compiled with the utmost care. The liability for the correctness, completeness and timelines is limited to gross negligence.

Cable	PUR, UL, S370

Flexible, silicone- and halogen-free control line with high mechanical strength. The cable is chemicals, hydrolysis-, and microbes- resistant. The drag-chain application is possible at a bending radius of minimum 10 x d. Due to its weld-field immunity, the cable is very well suited for the flexible application in robotics, machine-tool, and metal-cutting production. The cables meet the UL and CSA (UL10493/20549; cULus) requirements.

Outer diameter of jacket	6,4 +/- 0,2 mm
Cable-jacket material	PUR
Jacket color	BK, similar RAL9005
Wire cross-section	4 x 0.75 mm²
Wire insulation material	PP
Wire colors	BN, BK, BU, GNYE
Conductor structure	42 x 0,15 mm
Bending radius (fixed)	5 x Ø-cable
Bending radius (repeated)	10 x Ø-cable
Temperature range (repeated)	-30°C...+90°C
Temperature range (fixed)	-40°C...+90°C
Temperature range (drag chain)	-25°C…+60°C
Drag chain-application	2 Mio. cycles
Halogen-free	Yes
Rated voltage cable	≤300 V
Special features	flame retardant, seawater resistant, recyclable, LABS free, RoHs compliant, acid- and alkali resistant, ozone resistant, UV resistant, hydrolysis proof, drag chain-adapted, torsion resistant, welding sparks resistant, halogen free, silicone free, oil resistant

Classification	
eCl@ss 6.0	27279218
eCl@ss 7.0	27279218
eCl@ss 8.0	27279218
eCl@ss 9.0	27060312
ETIM 5.0	EC001855
ETIM 6.0	EC001855

Accessories

Labels, Valve connector
https://www.escha.net/en/Products/Standard/Accessories-for-connectivity/8047109/Labels-valve-connector-housing-styles-B/BI/C/CI

Fixing screw
https://www.escha.net/en/Products/Standard/Accessories-for-connectivity/8060907/Stainless-steel-screws-for-valve-connector-M3x28

The information contained in this data sheet was compiled with the utmost care. The liability for the correctness, completeness and timelines is limited to gross negligence.