Single-ended cordset, PROFIBUS, M12, shielded

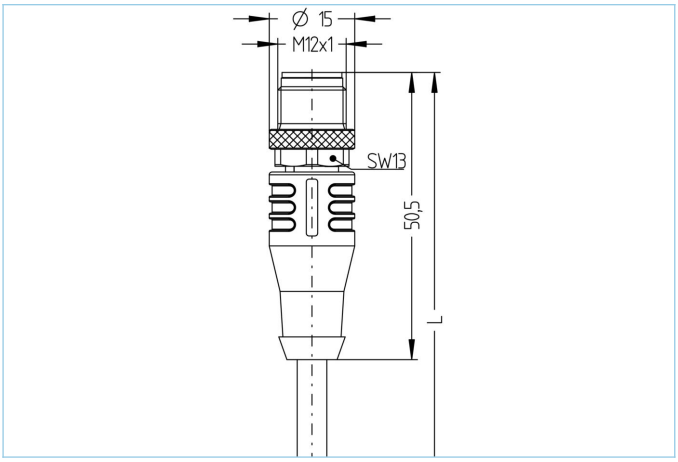

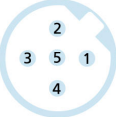

Product data	
Item description	PB-WASSW2.012-2/S1800
Item-No.	8043873
Length	2m
Customs tariff-No.	85444290
Step-File	PB-WASSW2-m.stp
EAN	4047106003159

Technical data	
Connector	male, straight, M12
Number of pins	4
Pin assignment	1 n.c., 2 GN, 3 n.c., 4 RD
Coding	B
Rated voltage	60V
Current load (at 40°C)	4A
Insulation resistance	≥10^8Ω
Resistance	≤ 5mΩ
Ambient temperature product	-30°C...+90°C
Contact material	Metal, CuZn, gold-plated
Contact-carrier material	Plastic, TPU, VT
Grip body material	Plastic, TPU, BK
Coupling nut material	Metal, CuZn, nickel-plated
Shielding	with shielding
Standards	IEC 61076-2-101
Degree of protection (mounted)	IP65, IP67, IP68
Mechanical life-cycle	>100 mating cycles
Cable end assembly	open cable end
Degree of pollution	3

The information contained in this data sheet was compiled with the utmost care. The liability for the correctness, completeness and timelines is limited to gross negligence.

Cable	PUR, UL, S1800, Profibus
UL- and CSA-listed shielded PUR-cable for automation technology (control of sensors and actuators). Suited for common variants of PROFIBUS DP and PROFIBUS PA. Setup and materials used allow for applications under harsh enviroment conditions (abrasion, bending, vibrations etc.). Drag-chain application is possible. (>1million bending cycles).	
Outer diameter of jacket	7,60 mm
Cable-jacket material	PUR
Jacket color	VT similar RAL4001
Wire cross-section	1 x 2 x 0.34 mm²
Wire insulation material	PE
Wire colors	RD, GN
Conductor structure	19 x 0.15 mm
Bending radius (fixed)	5 x Ø-cable
Bending radius (repeated)	15 x Ø-cable
Temperature range (repeated)	-25°C...+80°C
Temperature range (fixed)	-50°C...+80°C
Temperature range (drag chain)	-25°C…+60°C
Drag chain-application	>1Mio. cycles
Shielding	Yes
Halogen-free	Yes
Rated voltage cable	300V
Special features	flame retardant, seawater resistant, recyclable, LABS free, RoHs compliant, acid- and alkali resistant, ozone resistant, UV resistant, hydrolysis proof, drag chain-adapted, halogen free, oil resistant, high flexibility, microbes resistant
Classification	
eCl@ss 6.0	27279218
eCl@ss 7.0	27279218
eCl@ss 8.0	27279218
eCl@ss 9.0	27060311
ETIM 5.0	EC001855
ETIM 6.0	EC001855

Accessories

Mounting-set, M12
https://www.escha.net/en/Products/Standard/Accessories-for-connectivity/8047664/Mounting-set-M12-clips-and-screws-M4x8-black

Torque-wrench set
https://www.escha.net/en/Products/Standard/Accessories-for-connectivity/8055431/Torque-wrench-set-M8-M12

Marking rings Ø 9mm
https://www.escha.net/en/products/standard/accessories-for-connectivity/?p=1&o=3&n=15&f=809

Cable Stripping Tool
https://www.escha.net/en/Products/Standard/Accessories-for-connectivity/8066215/Cable-stripping-tool-4.40-7.00mm-outer-diameter

Cable Stripping Tool
https://www.escha.net/en/Products/Standard/Accessories-for-connectivity/8066216/Cable-stripping-tool-3.20-4.40mm-outer-diameter

The information contained in this data sheet was compiled with the utmost care. The liability for the correctness, completeness and timelines is limited to gross negligence.