Receptacle, M12

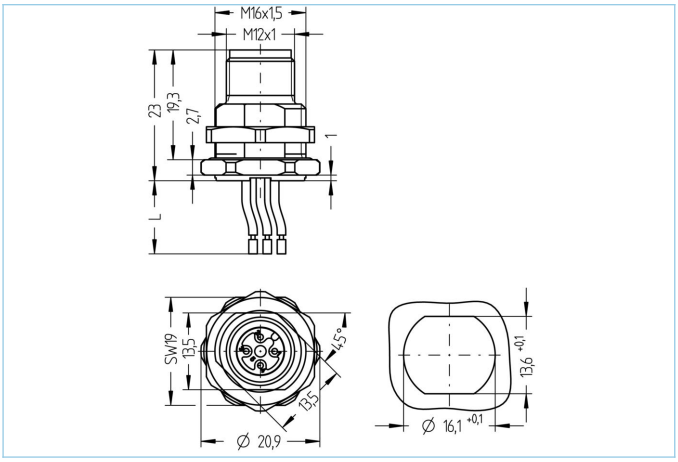

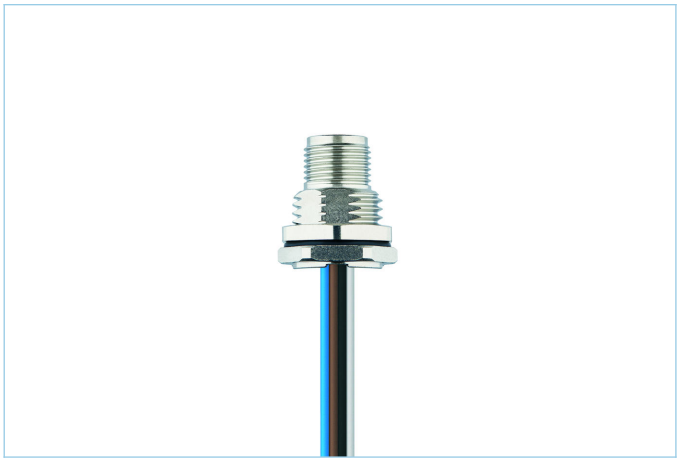

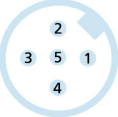

Product data	
Item description	AL-FHM12SUA5-0,5/M16
Item-No.	8071796
Customs tariff-No.	85444290
Packaging unit	5
Step-File	AL-FHM12SUA5-m_M16.stp
EAN	4047106169336
Substitute for	8027506

Technical data	
Connector	male, straight, M12
Number of pins	4+PE
Pin assignment	1 BN, 2 WH, 3 BU, 4 BK, 5 GNYE
Coding	A
Rated voltage	60V
Current load (at 40°C)	4A
Insulation resistance	≥10^8Ω
Ambient temperature product	-30°C...+90°C
Contact material	Metal, CuSn, gold-plated
Contact-carrier material	Plastic, PA GF, BK
Receptacle housing material	Metal, CuZn, nickel-plated
Material of external sealing	NBR
Mounting direction	Back wall-mounting (incl. Fixing screw)
Wrench size of fastening nut	A/F19
Wire length	0.50m
Wire colors	BN, WH, BU, BK, GNYE
Connecting type	Wire contact
Wire cross-section	4 x 0.34 mm²
Wire insulation material	PVC
Fastening thread	M16x1.5

The information contained in this data sheet was compiled with the utmost care. The liability for the correctness, completeness and timelines is limited to gross negligence.

Standards	IEC 61076-2-101
Degree of protection (mounted)	IP65, IP67, IP68
Mechanical life-cycle	>100 mating cycles
Degree of pollution	3
Wire cross-section	4 x 0.34 mm²
Wire cross-section PE	1 x 0.34 mm²
Classification	
eCl@ss 6.0	27279220
eCl@ss 7.0	27440103
eCl@ss 8.0	27440103
eCl@ss 9.0	27440103
ETIM 5.0	EC002061
ETIM 6.0	EC002061

The information contained in this data sheet was compiled with the utmost care. The liability for the correctness, completeness and timelines is limited to gross negligence.