Y-splitter, M12 - Valve CI, with cable outlet

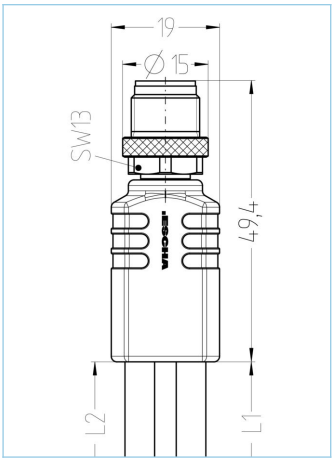

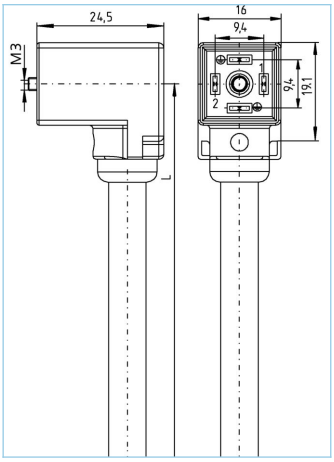

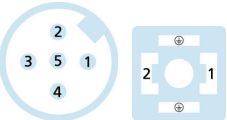

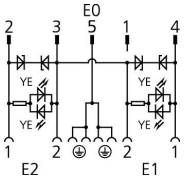

Product data	
Item description	YK-FS5M12-2VCI22-24.4-1/1/S370
Item-No.	8077654
Length	1m
Customs tariff-No.	85444290
Step-File	YK-FS5M12-2VCI22-L_L.stp
EAN	4047106235604

	Exit 0	Exit 1	Exit 2
Connector	male, M12, straight	female, Valve CI, angled	female, Valve CI, female
Contact material	Metal, CuZn, gold-plated	Metal, CuSn, silver-plated	Metal, CuSn, silver-plated
Contact-carrier material	Plastic, TPU, BK	Plastic, PA, BK	Plastic, PA, BK
Coupling nut material	Metal, CuZn, nickel-plated		
Grip body material	Plastic, TPU, BK	Plastic, TPU, BK, translucent	Plastic, TPU, BK, translucent
Rated voltage	60V	24VACDC	24VACDC
Coding of	A		
Number of pins	5	2+PE, PE bridged	2+PE, PE bridged
Current load (at 40°C)	4A	4A	4A

Insulation resistance	≥10^8Ω
Ambient temperature product	-30°C...+90°C
Signal status-indicator	LED YE
Sealing (female) material	Plastic, TPU
Fixing screw	Metal, CuZn, nickel-plated
Mechanical life-cycle	>100 mating cycles
Standards	IEC 61076-2-101, DIN EN 175301-803
Degree of protection (mounted)	IP65, IP67, IP68
Protection circuit	Z-diode
Degree of pollution	3

The information contained in this data sheet was compiled with the utmost care. The liability for the correctness, completeness and timelines is limited to gross negligence.

Cable	PUR, UL, S370

Flexible, silicone- and halogen-free control line with high mechanical strength. The cable is chemicals, hydrolysis-, and microbes- resistant. The drag-chain application is possible at a bending radius of minimum 10 x d. Due to its weld-field immunity, the cable is very well suited for the flexible application in robotics, machine-tool, and metal-cutting production. The cables meet the UL and CSA (UL10493/20549; cULus) requirements.

Outer diameter of jacket	5,20 mm
Cable-jacket material	PUR
Jacket color	BK, similar RAL9005
Wire cross-section	5 x 0.34 mm²
Wire insulation material	PP
Wire colors	BN, WH, BU, BK, GNYE
Conductor structure	42 x 0.10 mm
Bending radius (fixed)	5 x Ø-cable
Bending radius (repeated)	10 x Ø-cable
Temperature range (repeated)	-30°C...+90°C
Temperature range (fixed)	-50°C...+90°C
Temperature range (drag chain)	-25°C…+60°C
Drag chain-application	3 Mio. cycles
Halogen-free	Yes
Torsion	+/-180°/m, ≥ 1 Mio. cycles
Rated voltage cable	≤300 V
Special features	flame retardant, seawater resistant, recyclable, LABS free, RoHs compliant, acid- and alkali resistant, ozone resistant, UV resistant, hydrolysis proof, drag chain-adapted, torsion resistant, welding sparks resistant, halogen free, silicone free, oil resistant
Classification	
eCl@ss 6.0	27279218
eCl@ss 7.0	27279218
eCl@ss 8.0	27279218
eCl@ss 9.0	27060313
ETIM 5.0	EC001855
ETIM 6.0	EC001855

The information contained in this data sheet was compiled with the utmost care. The liability for the correctness, completeness and timelines is limited to gross negligence.