BS-W-12
Connector

- Plastic housing
- Metal screw
- Connection clamps
- High protection class
- Cable outlet 4 x 90° pivotable

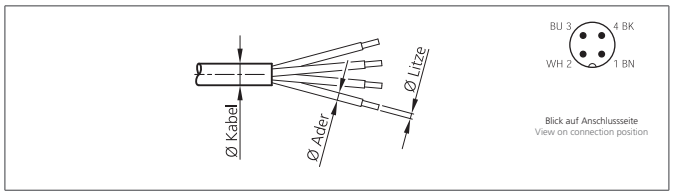

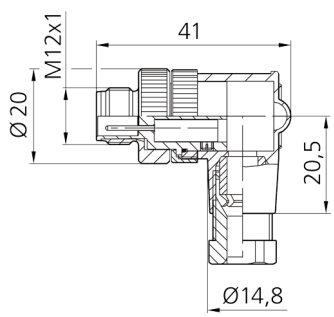

Safety instructions

The Instruments are not to be used for safety applications, in particular applications in which safety of persons depends on proper operation of the instruments.
These instruments shall exclusively be used by qualified personnel.

TECHNICAL INFORMATION (typ.)	+20°C, 24V DC
Design	angled
Protection class	IP 67
Casing material	plastics
Connection sensor side	Field-wireable, Connecting clamps, 4-poled
Connection control side	Connector, M12x1, 4-poled
For cable diameters	4,0 ... 6,0 mm
For stranded wire cross section	0,75 mm²