AKFS 18/1
Adapter M18 up to R1

Safety instructions

The Instruments are not to be used for safety applications, in particular applications in which safety of persons depends on proper operation of the instruments.
These instruments shall exclusively be used by qualified personnel.

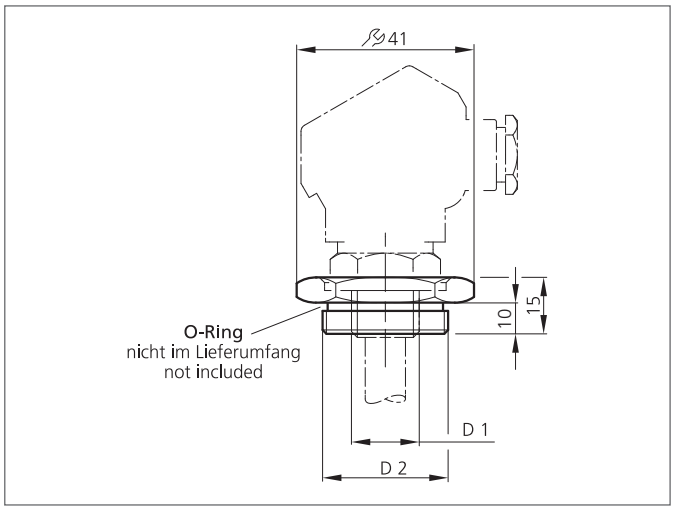

TECHNICAL INFORMATION (typ.)	+20°C, 24V DC
Size	M18 x 1 (D1) / R1" (D2) (thread)
Casing material	stainless steel V2A (1.4301 / AISI 304)