BE 1-A65-DIF

- Diffusion filter
- For a homogenous light reduction and illumination
- Quick and easy fix and mounting
- 安装材料包含在产品内

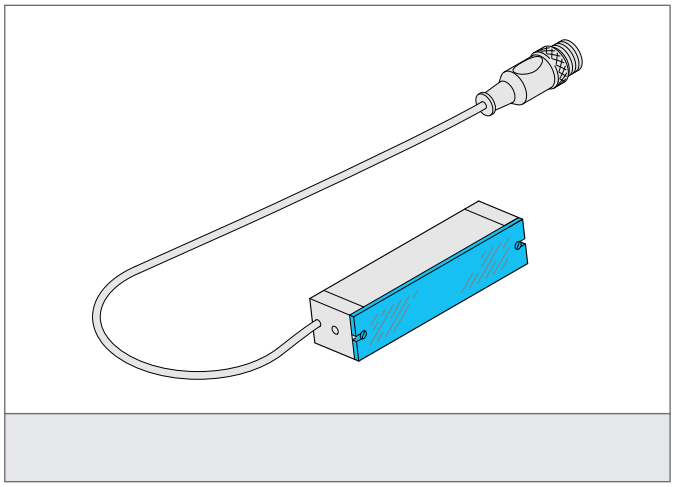

Safety instructions

The Instruments are not to be used for safety applications, in particular applications in which safety of persons depends on proper operation of the instruments.
These instruments shall exclusively be used by qualified personnel.

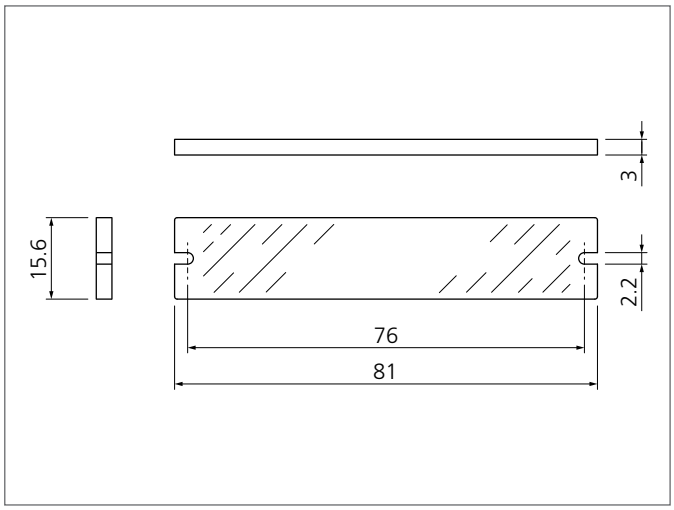

TECHNICAL INFORMATION (typ.)	+20°C, 24V DC
安装	2 holes
尺寸	81 x 15.6 x 3 mm (尺寸)
照明区域	65 mm
负载振荡	10 ... 55 Hz / 1,0 mm / 30 g
为了……	Barlights BE 1-A65 ...
材料	PMMA (防护玻璃)
交货范围	1 diffusion screen, 2 pan-head screws M2x6 DIN 7985 Zn, cross recess