BE 1-A130-POL-90
Polarizer 90°

- Polarized filter 90°
- To reduce glare or reflections
- Quick and easy fix and mounting
- Mounting materials included in scope of delivery

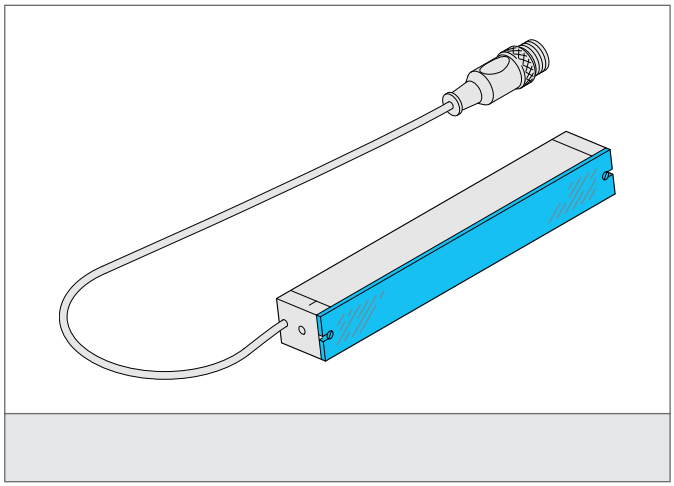

Safety instructions

The Instruments are not to be used for safety applications, in particular applications in which safety of persons depends on proper operation of the instruments.
These instruments shall exclusively be used by qualified personnel.

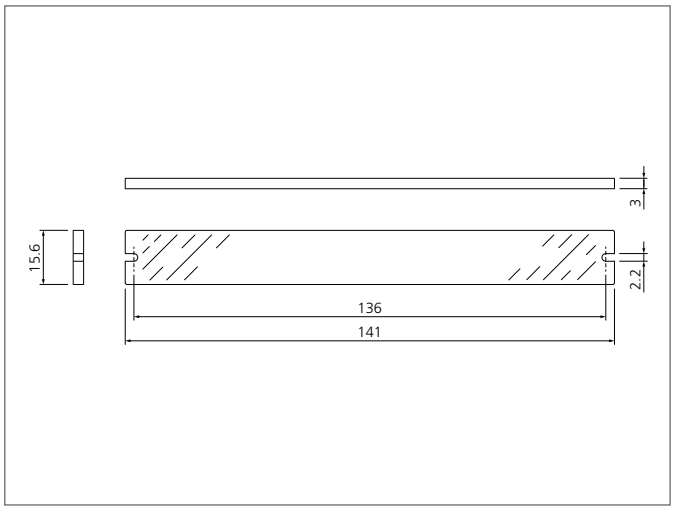

TECHNICAL INFORMATION (typ.)	+20°C, 24V DC
Mounting	2 holes
Size	141 x 15.6 x 3 mm (Dimensions)
Illuminated area	130 mm
Characteristics	With polarizing effect 90° rotated
Shock-/vibration load	10 ... 55 Hz / 1,0 mm / 30 g
Suitable for	Barlights BE 1-A130 ...
Material	PMMA (protective glass)
Transmission	42%
Scope of delivery	1 polarisation screen, 2 pan-head screws M2x6 DIN 7985 Zn, cross recess