# R 51X94/500°
# Reflector

- For infrared and red light
- High temperature resistant until 500 °C
- Hole Ø3.3 mm (2x)
- Suitable for polarized light

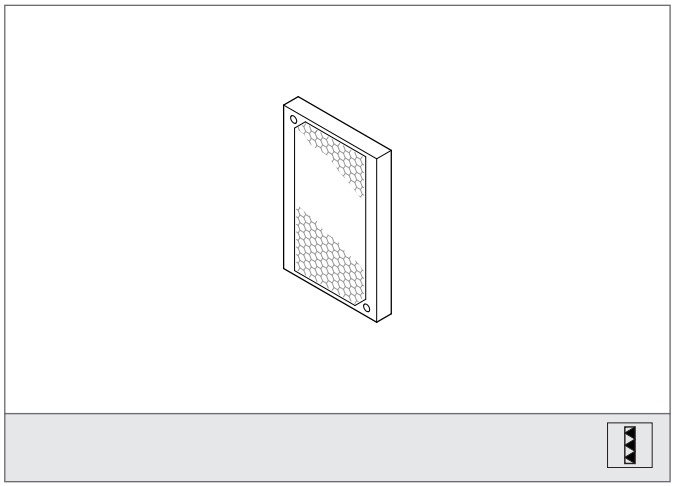

### Safety instructions

The Instruments are not to be used for safety applications, in particular applications in which safety of persons depends on proper operation of the instruments.
These instruments shall exclusively be used by qualified personnel.

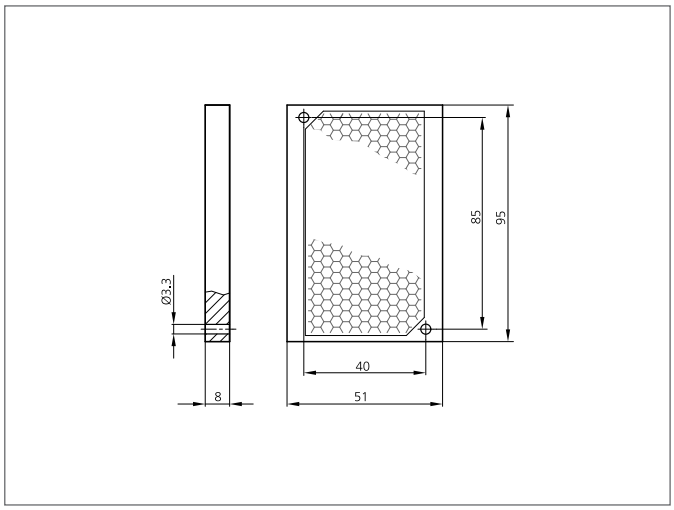


| TECHNICAL INFORMATION (typ.) | +20°C, 24V DC |
|---|---|
| Mounting | 2 holes |
| Size | 51 x 94 mm (Surface)<br>9 mm (Height) |
| Design | rectangular |
| Emitted light | Infrared and red |
| Ambient temperature, operation | until 500 °C |
| Version | Reflector |