R 46
Reflector

- For infrared and red light
- Heat-resistant until 80 °C
- Adhesive
- Suitable for polarized light

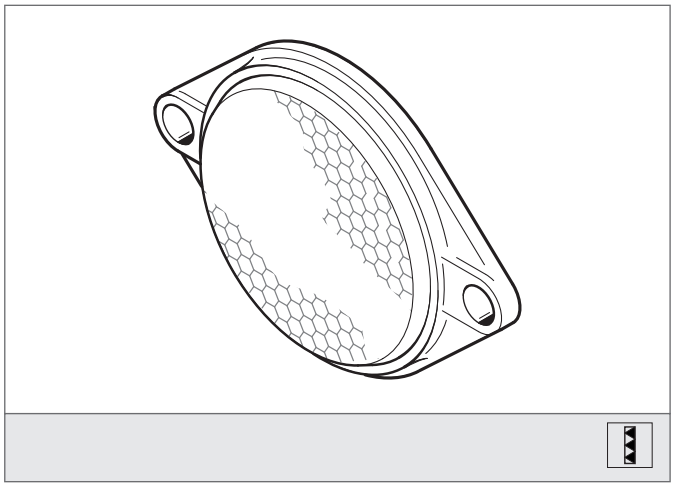

Safety instructions

The Instruments are not to be used for safety applications, in particular applications in which safety of persons depends on proper operation of the instruments.
These instruments shall exclusively be used by qualified personnel.

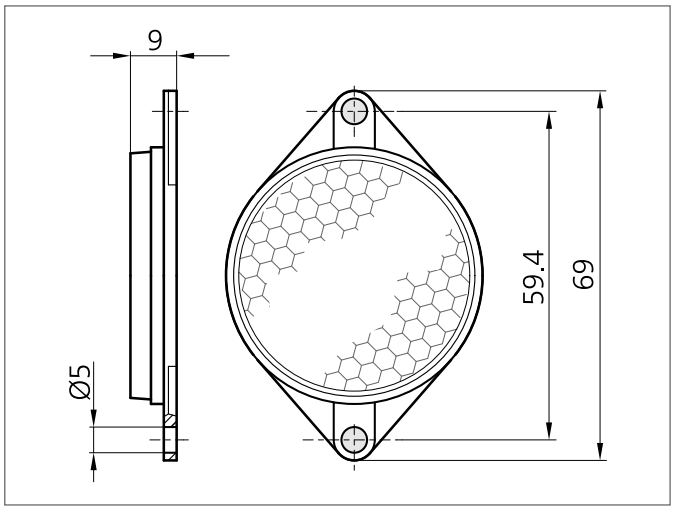

TECHNICAL INFORMATION (typ.)	+20°C, 24V DC
Mounting	2 holes
Size	Ø 46 mm (Diameter) 9 mm (Height)
Ambient temperature, operation	until 80 °C
Casing material	plastics black