SH-LHT9-45
Mounting Kit

- Adjustable
- Robust design

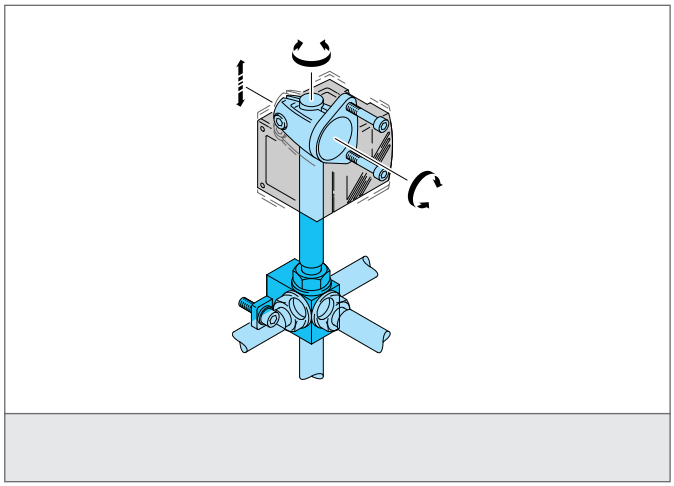

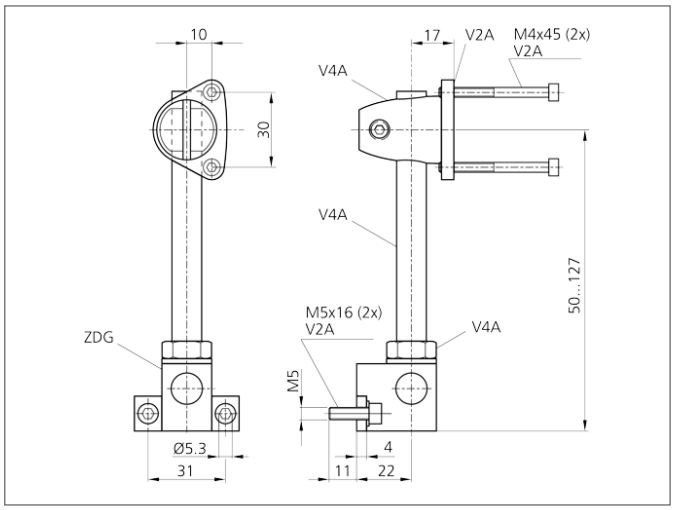

TECHNICAL INFORMATION (typ.)	
Hole spacing	30 mm
Characteristics	Adjustable, robust design
Mounting hole	Ø 4,3 mm
Suitable for	Laser distance sensors LHT 9-45 ...
Casing material	stainless steel