# SH 12
## Sensor Holder

- For cylindrical Sensors of Ø 12 mm or thread M12
- Simple installation
- Reduced mounting/downtimes thanks to one-piece construction
- Sensor exchange without changing the clamp position
- Oblong holes permit clamp adjustment

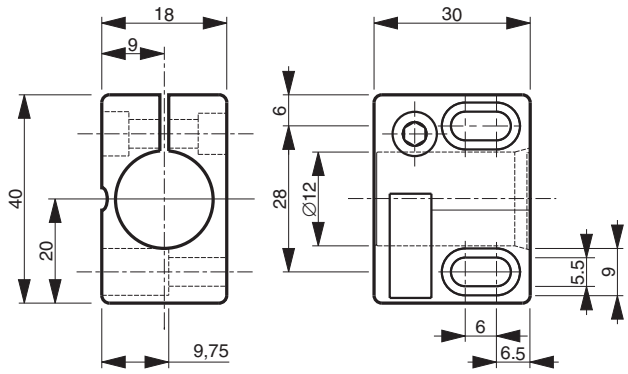


| TECHNICAL INFORMATION (typ.) | +20°C, 24V DC |
|---|---|
| Hole spacing | 28 mm |
| Size | 18 x 30 x 40 mm (Dimensions)<br>12 mm (Clamping diameter G) |
| Characteristics | without limit stop |
| Casing material | plastics (polyamide - PA 6 GK) |