BW 22/22
Mounting Bracket

- Adjustable
- Robust design

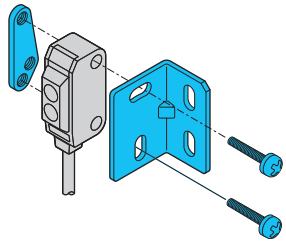

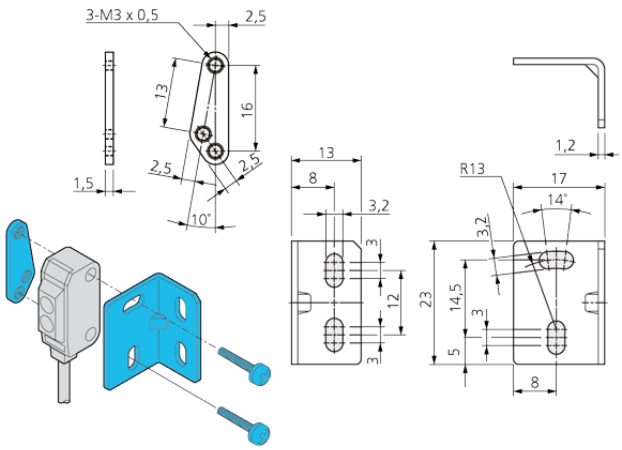

TECHNICAL INFORMATION (typ.)	
Hole spacing	13 / 16 mm
Mounting hole	Ø 3,2 mm
Casing material	stainless steel V2A (1.4301 / AISI 304)