DCCK 18 M 20 NSK-IBSL
Inductive Proximity Switch

- Metal plug
- Integrated amplifier
- Short-circuit protection
- Starting pulse suppression
- LED

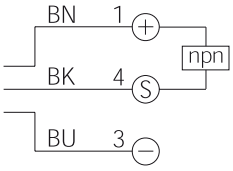

BN = **brown**
BK = **black**
BU = **blue**

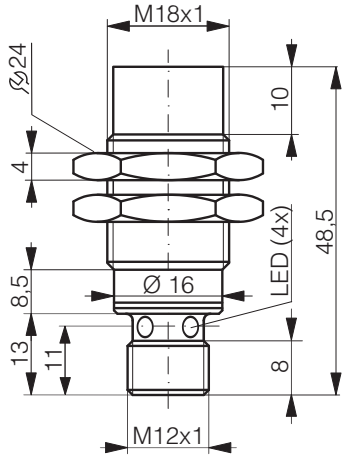

Safety instructions

The Instruments are not to be used for safety applications, in particular applications in which safety of persons depends on proper operation of the instruments.
These instruments shall exclusively be used by qualified personnel.

TECHNICAL INFORMATION (typ.)	+20°C, 24V DC
Operating principle	Inductive
Evaluation	digital
Size	M18 x 1 (thread)
Design	screw
Mounting	non-flush
Characteristics	extremely high operating distance
Operating distance	20 mm
Standardized measuring plate	60 x 60 x 1 mm
Service voltage	10 ... 30 V DC
No-load current	< 10 mA
Switching output	npn, 200 mA, NO
Switching hysteresis	5 %
Shock-/vibration load	10 ... 55 Hz / 1,0 mm / 30 g
Voltage drop	< 2,0 V
Switching frequency	200 Hz
Ambient temperature, operation	-25 ... +70 °C
Insulation voltage endurance	500 V
Protection class	IP 67
Casing material	brass nickel plated
Connection	Connector, M12