BE 1-A240-Frameset
Mounting Frame

- Smooth adjustment
- Robust metal casing

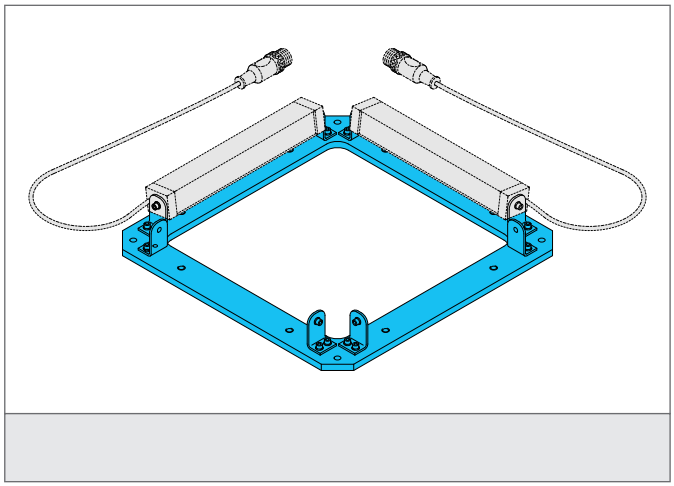

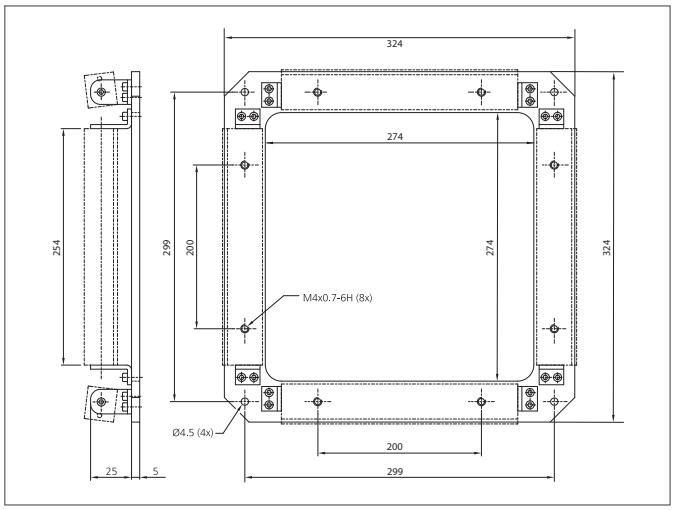

TECHNICAL INFORMATION (typ.)	+20°C, 24V DC
Casing material	Aluminium black anodized