BEK-A200-DIF
Diffusor

- Diffusion filter
- Homogenous light reduction
- Quick and easy fix and mounting
- Scratch-proof protection window
- Mounting materials included in scope of delivery

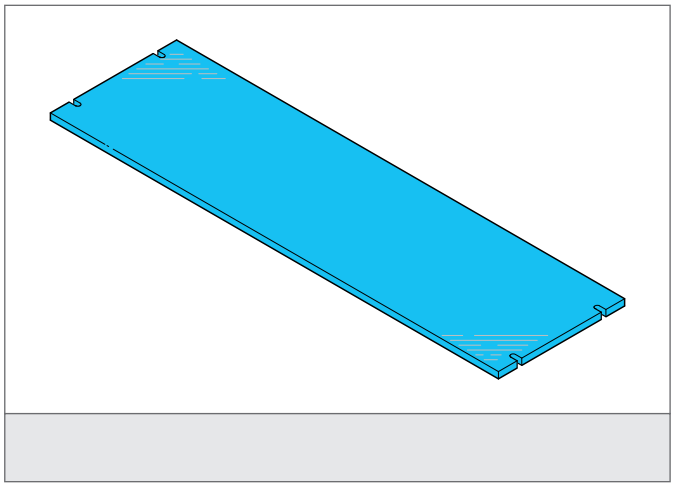

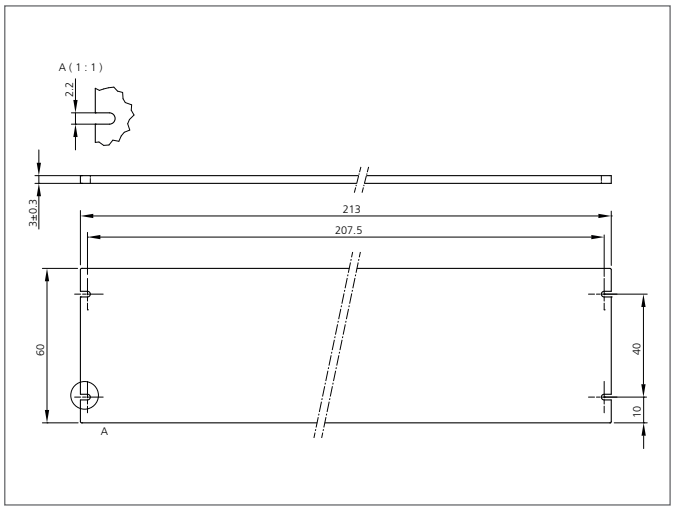

TECHNICAL INFORMATION (typ.)	+20°C, 24V DC
Characteristics	Mounting hardware included
Suitable for	Bar lights BE-A200..., Bar lights BEK-A200...
Material	PMMA, hardcoated (Window)