BE-CS-G0
LED Board Replacement Kit, IR

- For the assembly at CS 50

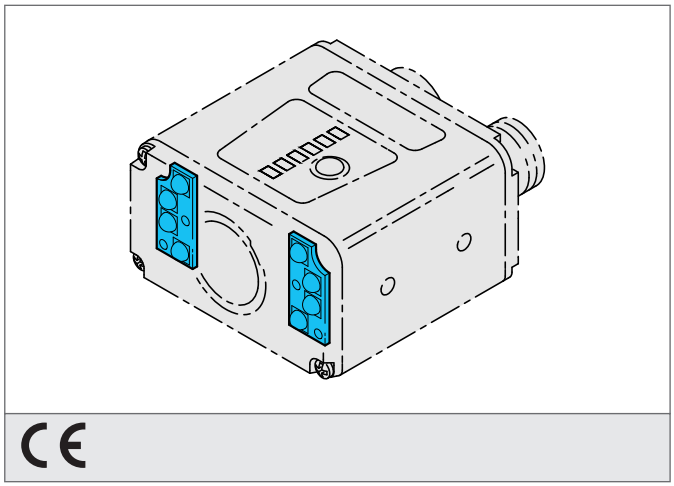

Safety instructions

The Instruments are not to be used for safety applications, in particular applications in which safety of persons depends on proper operation of the instruments.
These instruments shall exclusively be used by qualified personnel.

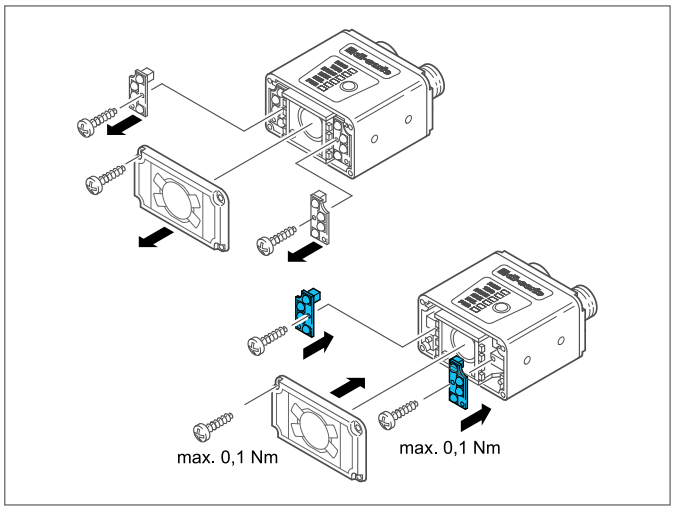

TECHNICAL INFORMATION (typ.)	+20°C, 24V DC
光的颜色	Infrared, 850 nm
为了……	CS 50
Tightening torque	max. 0,1 Nm