# BE-CS-G0
# LED Board Replacement Kit, IR

- For the assembly at CS 50

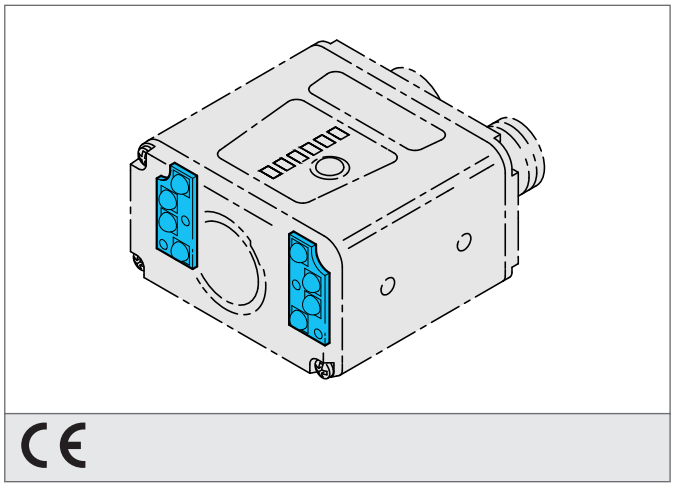

## Safety instructions

The Instruments are not to be used for safety applications, in particular applications in which safety of persons depends on proper operation of the instruments.
These instruments shall exclusively be used by qualified personnel.

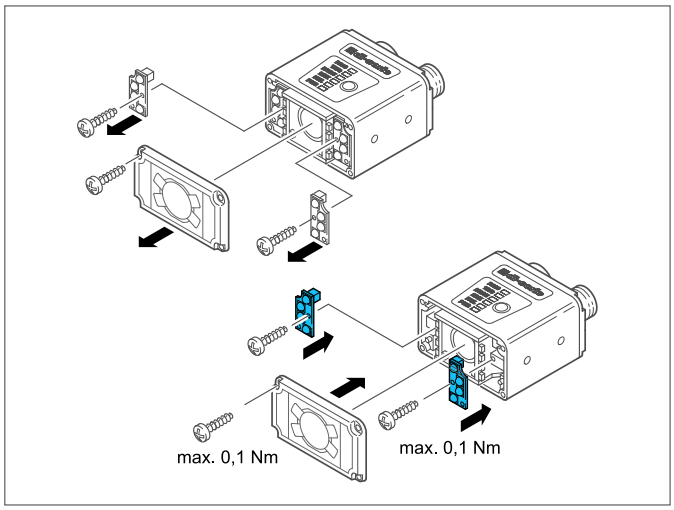


| TECHNICAL INFORMATION (typ.) | +20°C, 24V DC |
|---|---|
| Color de la luz | Infrarrojo, 850 nm |
| Apropiado para | CS 50 |
| Tightening torque | max. 0,1 Nm |