WRB 120 P-SG-M6x30-2.5
Glass fiber optic

- High-quality glass fibres
- Resistant to high temperature
- Robust, highly flexible

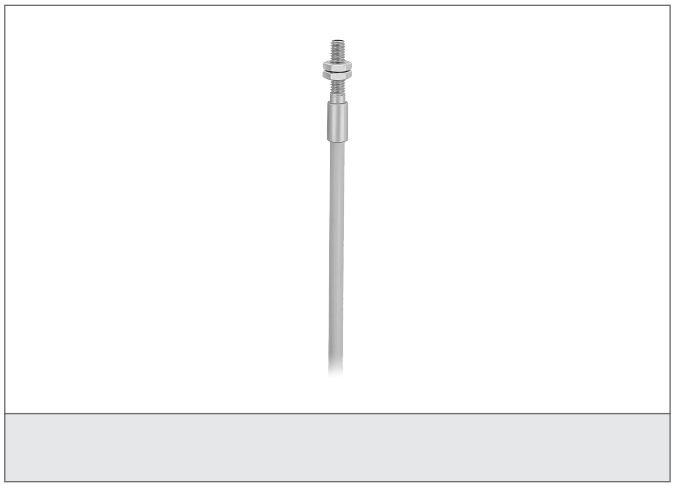

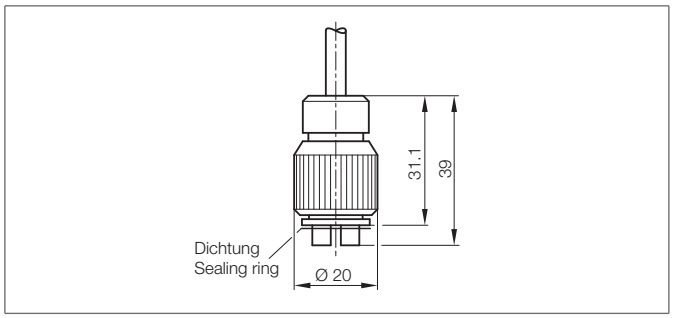

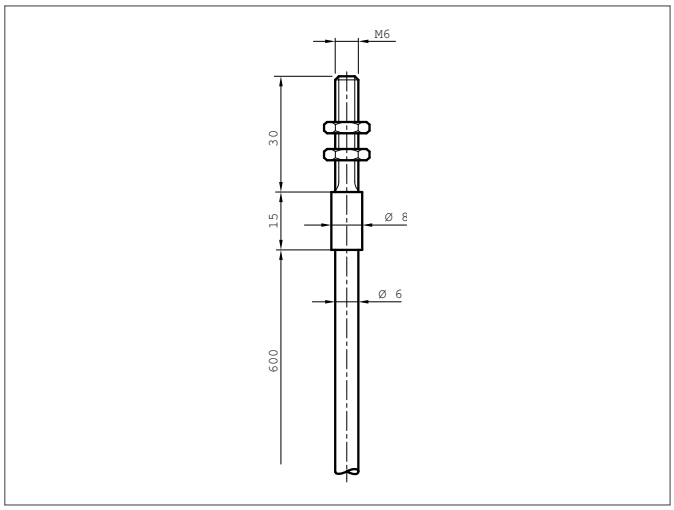

Safety instructions

The Instruments are not to be used for safety applications, in particular applications in which safety of persons depends on proper operation of the instruments.
These instruments shall exclusively be used by qualified personnel.

TECHNICAL INFORMATION (typ.)	+20°C, 24V DC
Operating principle	Diffuse reflective sensor
Design	cylinder
Length	600 mm
Dimension fiber bundles	Ø 2,5 mm
Opening angle	68°
Light outlet	axial
Bending radius	> 10 x tube-Ø
Temperature resistance	+ 80 °C
Protection class	IP 67
Suitable for	FSB 10 M G1-B8
Material	Stainless steel (Sensor probe) glass fiber (Fiber) PVC (Cladding)