KUS 50 M 100 PSK-TSL
Contact Sensor

- Detection through direct contact during ejection or free fall
- For screws, studs, punched parts, springs and non-metallic parts
- Adjustable suppression of multiple impulses
- Up to 100 parts per second
- Long life due to interchangeable baffle plate
- Proper function even under most extreme conditions

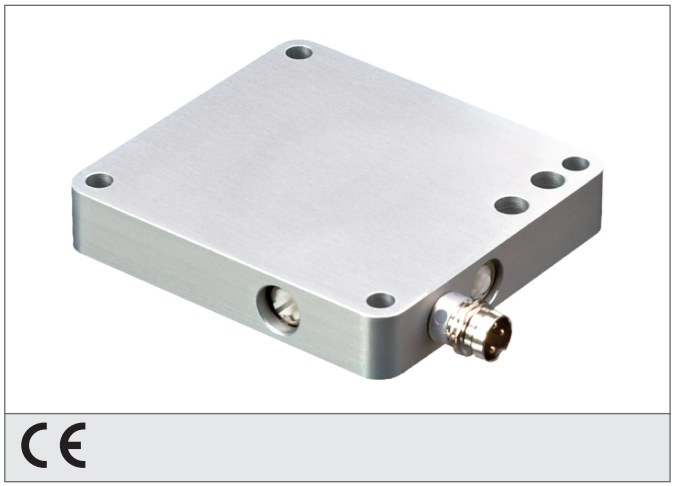

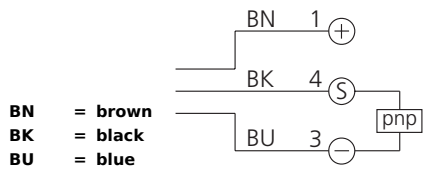

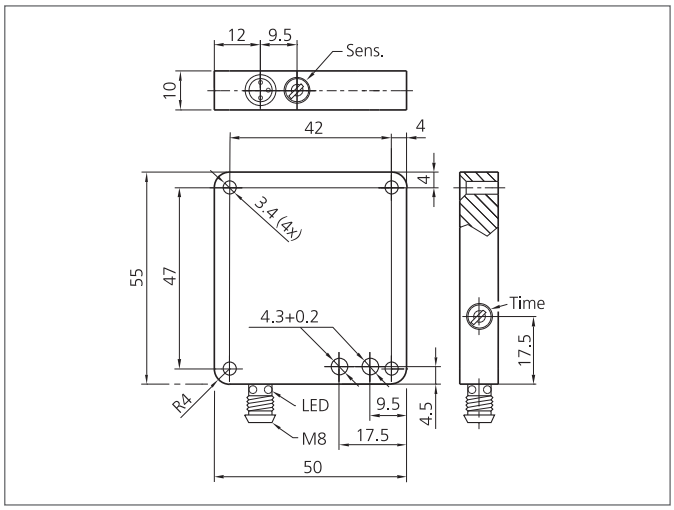

Safety instructions

The Instruments are not to be used for safety applications, in particular applications in which safety of persons depends on proper operation of the instruments.
These instruments shall exclusively be used by qualified personnel.

TECHNICAL INFORMATION (typ.)	+20°C, 24V DC
Characteristics	up to 100 parts per second
Service voltage	10 ... 35 V DC
No-load current	< 15 mA
Switching output	pnp, 200 mA, NO
Sensitivity	steelball Ø 3 mm from 20 mm height
Pulse stretching	0,1 ... 30 ms adjustable
Switching frequency	100 Hz
Response-/release time	0,30 ms
Ambient temperature, operation	-25 ... +70 °C
Protection class	IP 67
Casing material	Aluminium
Connection	Connector, M8, 3-poled
Connecting cable	TK ...