MB-DIF-125
Diffusor

- Difúzní filtr
- Pro homogenní redukci sv tla a osv tlení
- Rychlá a snadná montáž

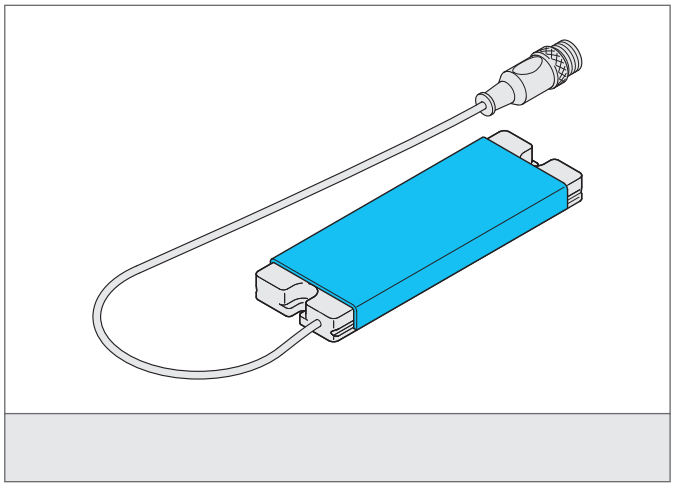

Safety instructions

The Instruments are not to be used for safety applications, in particular applications in which safety of persons depends on proper operation of the instruments.
These instruments shall exclusively be used by qualified personnel.

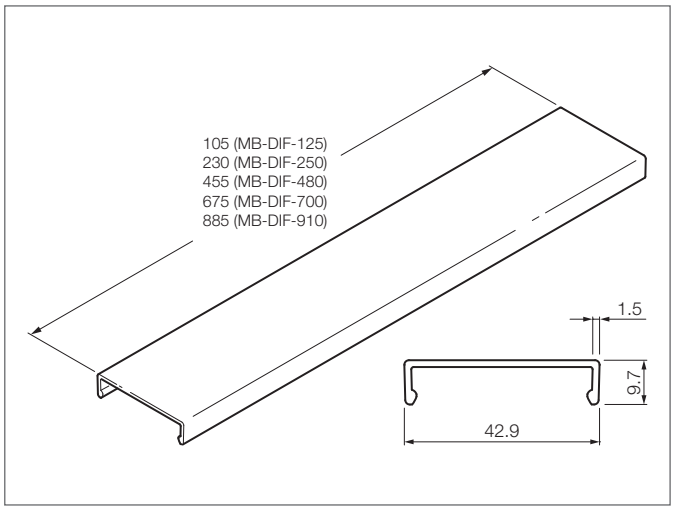

TECHNICAL INFORMATION (typ.)	+20°C, 24V DC
P ipevn ní	by clamping groove
Osv tlená oblast	105 x 40 mm
Vhodné pro	MB-N-125 ...
Materiál	PC diffuse (Okno)
Hmotnost	12 g