BE-DOME170/110-G1-T4
Dome light

- Exceptionally homogenous and diffuse illumination
- Very compact design
- High light intensity
- Robust design

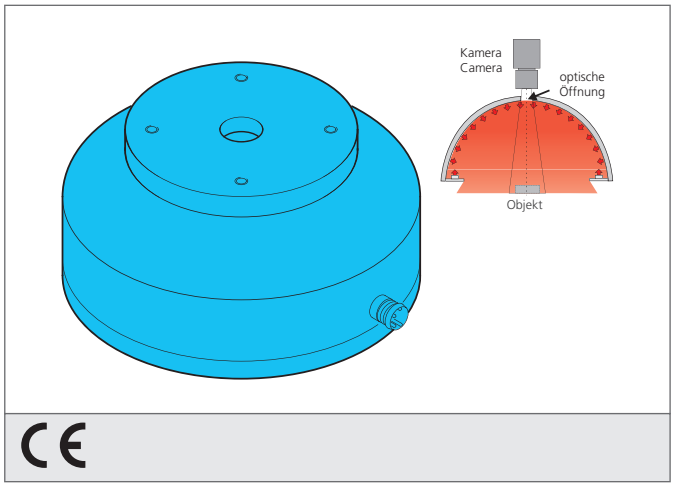

PIN	Aderfarbe wire color	Funktion function
3	blau / blue	- blau / blue
1	braun / brown	+ 24V

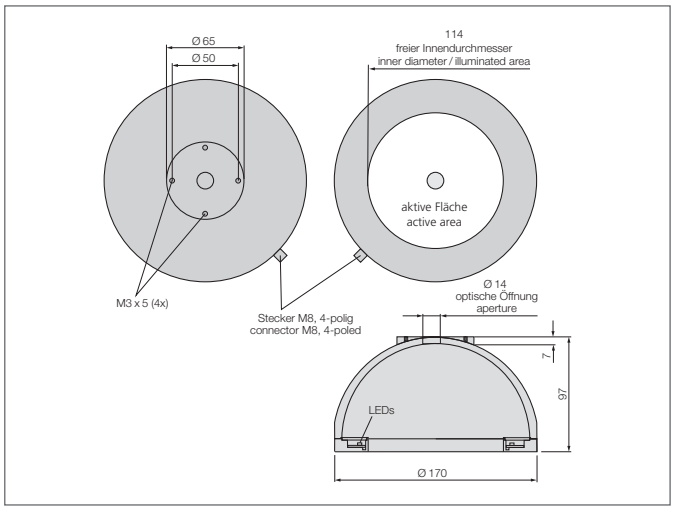

Safety instructions

The Instruments are not to be used for safety applications, in particular applications in which safety of persons depends on proper operation of the instruments.
These instruments shall exclusively be used by qualified personnel.

TECHNICAL INFORMATION (typ.)	+20°C, 24V DC
Size	Ø 170 mm (Diameter)
Illuminated area	Ø 114 mm
Light colour	Red, 635 nm
Emission angle FWHM	120°
Service voltage	24 V DC
Power	3,4 W 140 mA, (24 V DC)
Current consumption	140 mA
Ambient temperature, operation	0 ... +50 °C
Protection degree	III, operation on protective low voltage
Risk group (DIN EN 62471)	Free group
Casing material	Aluminium, plastics
Connection	Connector, M8, 4-poled