WRB 220 S-4.5-2.5
Glass fiber optic

- High-quality glass fibres
- Resistant to high temperature
- Robust, highly flexible

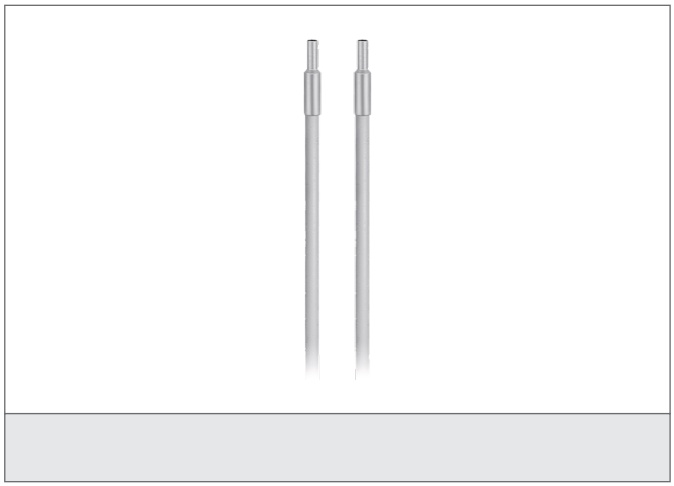

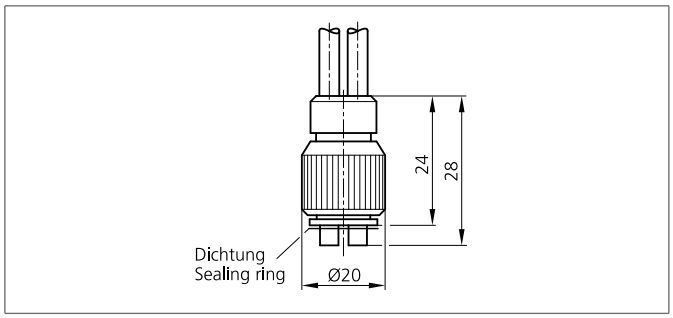

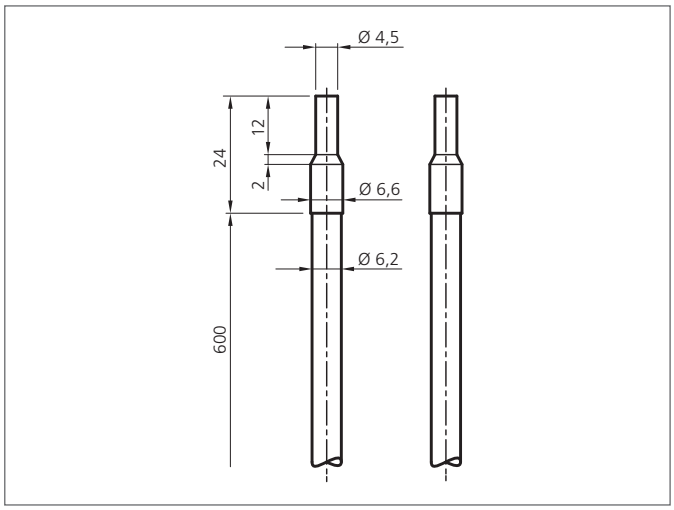

Safety instructions

The Instruments are not to be used for safety applications, in particular applications in which safety of persons depends on proper operation of the instruments.
These instruments shall exclusively be used by qualified personnel.

TECHNICAL INFORMATION (typ.)	+20°C, 24V DC
Operating principle	Through beam sensor
Length	600 mm
Opening angle	67°
Light outlet	axial
Bending radius	> 3 x tube-Ø
Shock-/vibration load	10 ... 55 Hz / 1,0 mm / 30 g
Temperature resistance	-40 ... + 180 °C (short-term up to +250 °C)
Protection class	IP 67
Suitable for	Colour Sensors
Material	Silicone-metal sleeve (Cladding)