VO-M12/10-4.5-2.5
Óptica focalizadora

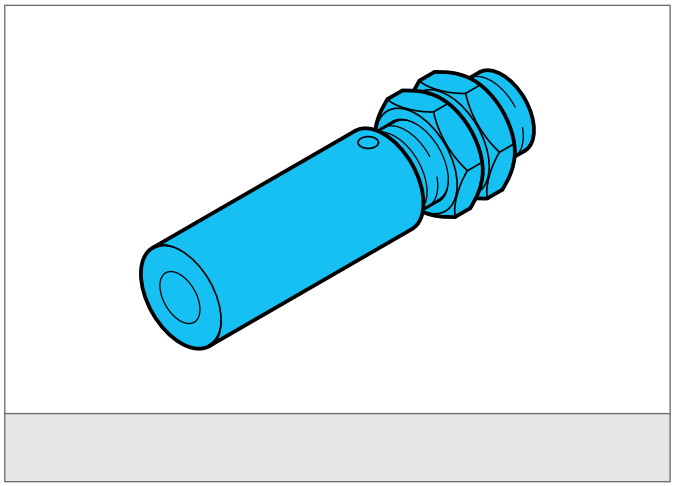

Safety instructions

The Instruments are not to be used for safety applications, in particular applications in which safety of persons depends on proper operation of the instruments.
These instruments shall exclusively be used by qualified personnel.

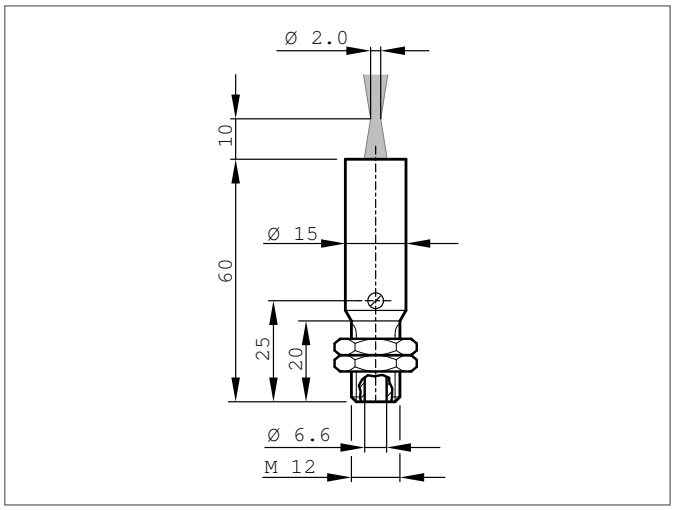

TECHNICAL INFORMATION (typ.)	
Tamaño de punto de luz	Ø 2 mm
Distancia de trabajo	10 mm
Rango de escaneado	10 ... 15 mm