CS12D5

- 结实耐用的金属连接环
- 可弯曲的头部设计
- 易剥离
- 高防护等级

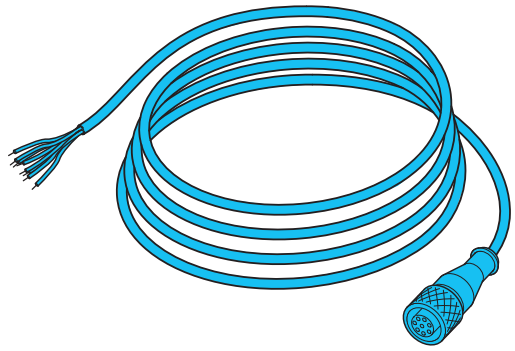

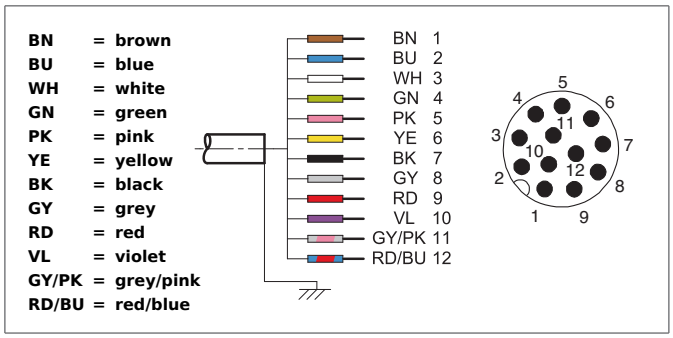

Safety instructions

All the installation, connection and safety regulations, as per our technical information, have to be strictly adhered to.
The set-up of the products have to be made by skilled staff, only.
Repair exclusively made by di-soric.

TECHNICAL INFORMATION (typ.)	+20°C, 24V DC
操作原理	连接线
尺寸	M12 (thread)
设计	直的
长度	5000 mm
特征	metal coupling ring
防护等级	IP 67
为了……	receiver SLM4
材料	PVC (电缆)
连接	Socket, M12, 12-poled, flying leads