SFB E180
Adjustable fixing brackets

- Adjustment range up to 180°
- Robust design
- Set includes the for emitter and receiver necessary brackets
- Use is recommended for long distances or the use of deflection mirrors

Safety instructions

All the installation, connection and safety regulations, as per our technical information, have to be strictly adhered to.
The set-up of the products have to be made by skilled staff, only.
Repair exclusively made by di-soric.

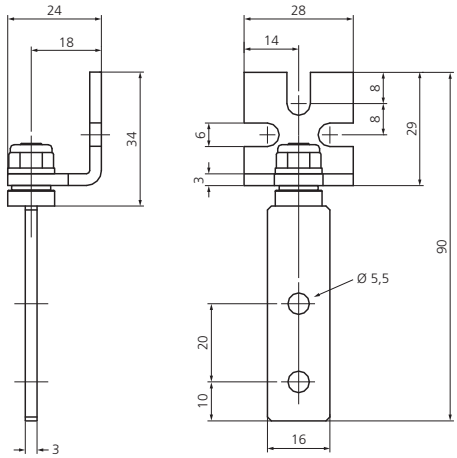

TECHNICAL INFORMATION (typ.)	+20°C, 24V DC
Operating principle	Adjustable fixing bracket
Adjustment range	180°
Suitable for	all light curtains and light grids
Material	Black anodized steel (Fixing brackets)
Scope of delivery	quick installation guide, 4 swivel brackets, Fixing material