SA 4
Standard fixing brackets

- Robust design
- Set includes the for emitter and receiver necessary brackets

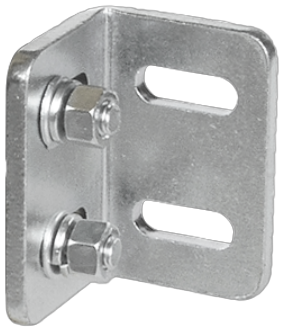

Safety instructions

All the installation, connection and safety regulations, as per our technical information, have to be strictly adhered to.
The set-up of the products have to be made by skilled staff, only.
Repair exclusively made by di-soric.

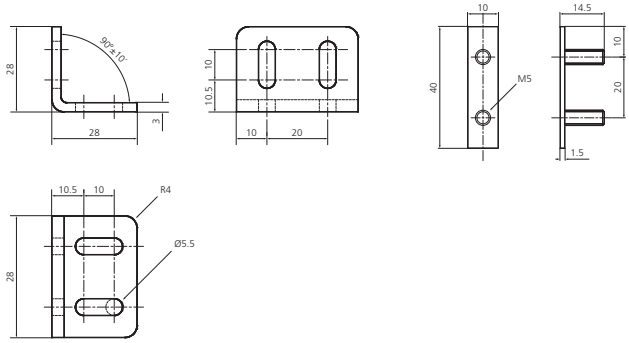

TECHNICAL INFORMATION (typ.)	+20°C, 24V DC
Operating principle	Standard fixing bracket
Suitable for	all light curtains / -grids with a protected height up to 1060 mm
Material	Zinc plated metal (Fixing brackets)
Scope of delivery	4 standard fixing brackets, Fixing material