VO-M12/10-4.5-2.5
Focus Optic

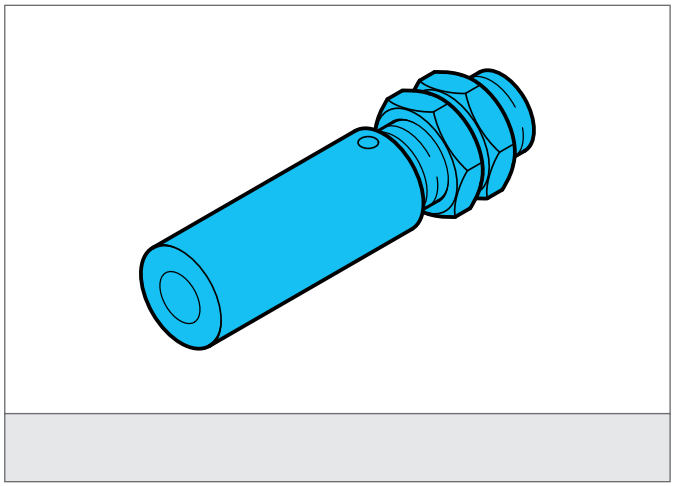

Safety instructions

The Instruments are not to be used for safety applications, in particular applications in which safety of persons depends on proper operation of the instruments.
These instruments shall exclusively be used by qualified personnel.

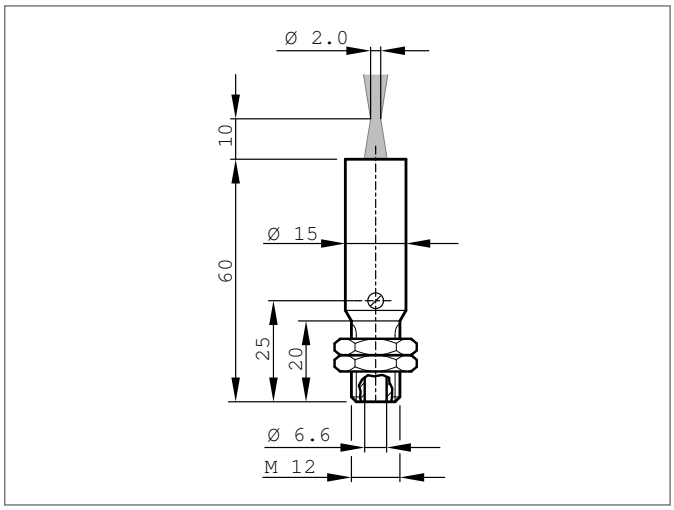

TECHNICAL INFORMATION (typ.)	
Light spot size	Ø 2 mm
Working distance	10 mm
Scanning range	10 ... 15 mm