SH-UGU-08-14

Sensor Holder for Fork light barriers

- Highly flexible versatile mounting system
- All-purpose mounting
- Smooth adjustment
- Robust design

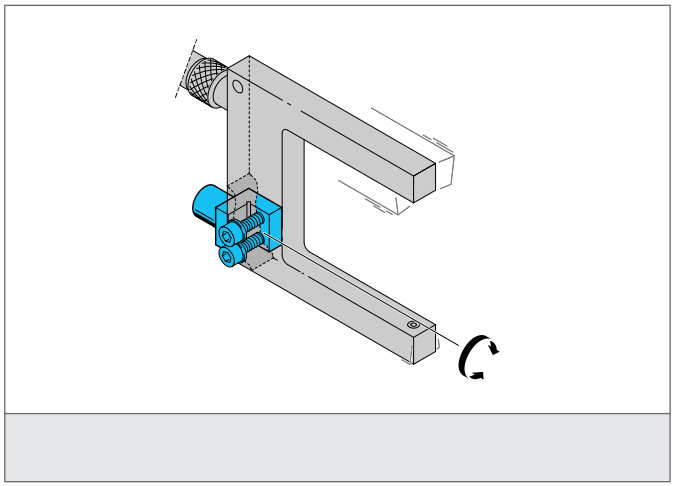

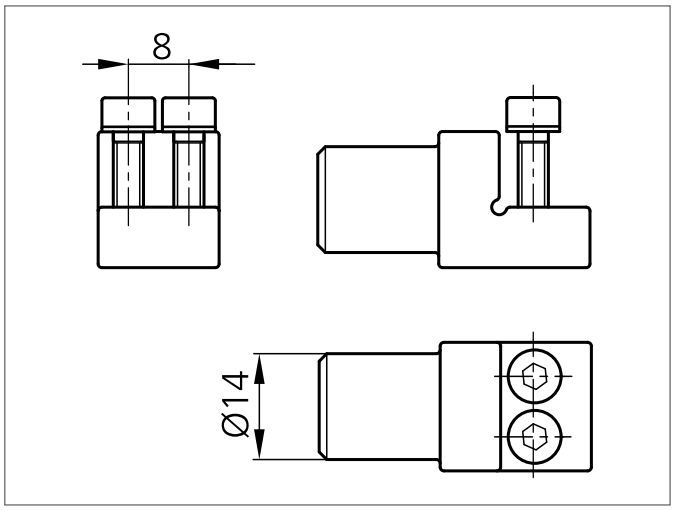

TECHNICAL INFORMATION (typ.)	+20°C, 24V DC
Size	14 mm (Diameter A)
Suitable for	Clamping pin 14 mm
Casing material	plastics
Product series	System holder HS