MA-L2X
Muting arms

- Muting easily done by hardware wiring to SLM4
- Pre-wired muting arms for SLM4 for quick start-up
- Integratable, height-adjustable muting arms in mounting groove from SLM4
- Simple connector, connection of the muting sensors directly at the SLM4 safety light grid

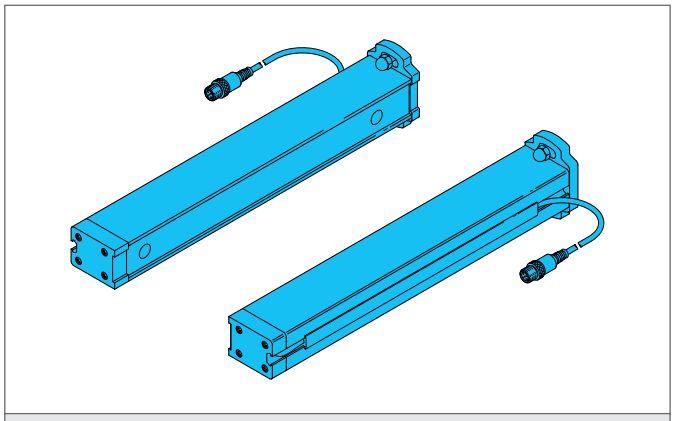

Safety instructions

All the installation, connection and safety regulations, as per our technical information, have to be strictly adhered to.
The set-up of the products have to be made by skilled staff, only.
Repair exclusively made by di-soric.

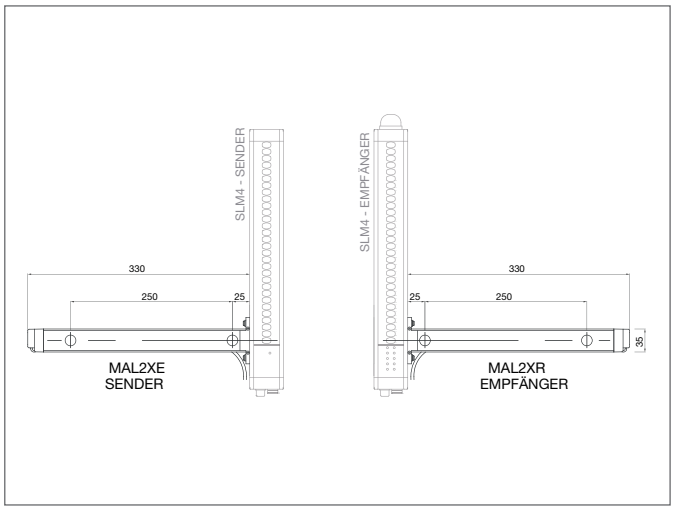

TECHNICAL INFORMATION (typ.)	+20°C, 24 V DC
función de protección	Control de acceso
Principio de funcionamiento	Sensor en barrera
Número de haces	1
Luz emitida	Infrarrojo
Tensión de alimentación	19,2 ... 28,8 V DC
Distancia de trabajo	1 ... 2,5 m
Salida de conmutación	pnp, 100 mA, NO
Temperatura ambiente, operación	-30 ... +55 °C
Scope of delivery	Guía de instalación rápida, Material de fijación, 2 muting arms
Muting sensors adjustable in	height
Execution of the muting arms	L (2 muting arms), 2 muting sensors, Cross muting