MA-L2P TRX
Muting arms

- Muting easily done by hardware wiring to SLM4
- Pre-wired muting arms for SLM4 for quick start-up
- Integratable, height-adjustable muting arms in mounting groove from SLM4
- Simple connector, connection of the muting sensors directly at the SLM4 safety light grid

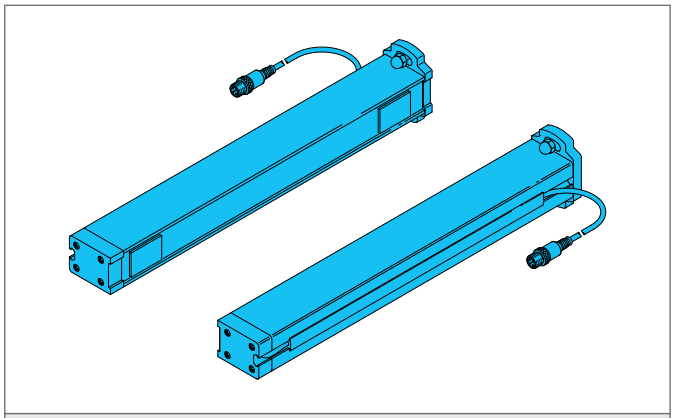

Safety instructions

All the installation, connection and safety regulations, as per our technical information, have to be strictly adhered to.
The set-up of the products have to be made by skilled staff, only.
Repair exclusively made by di-soric.

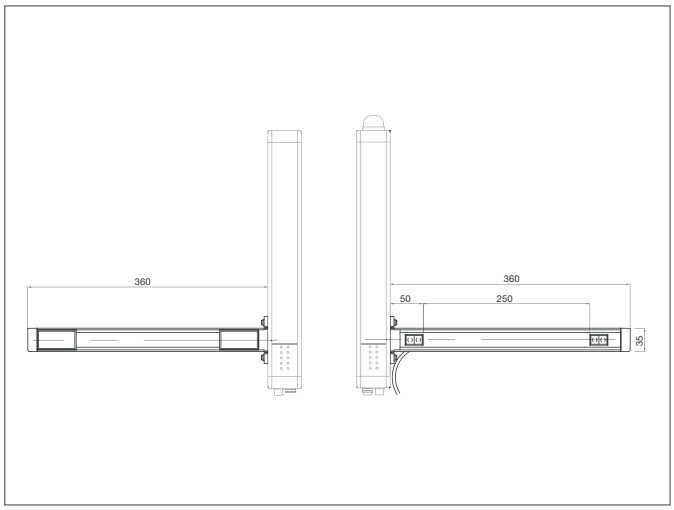

TECHNICAL INFORMATION (typ.)	+20°C, 24 V DC
Protective function	Access control
Operating principle	Retroreflective sensor
Number of beams	1
Emitted light	Infrared
Service voltage	19,2 ... 28,8 V DC
Operating distance	0 ... 3,5 m
Switching output	pnp, 100 mA, NO
Ambient temperature, operation	-30 ... +55 °C
Scope of delivery	quick installation guide, Fixing material, 2 muting arms
Muting sensors adjustable in	height
Execution of the muting arms	L (2 muting arms), 2 muting sensors, Parallel muting