FMC-CBL
Base for mounting column

- Steel anchor bolts enclosed
- Robust design

Safety instructions

All the installation, connection and safety regulations, as per our technical information, have to be strictly adhered to.
The set-up of the products have to be made by skilled staff, only.
Repair exclusively made by di-soric.

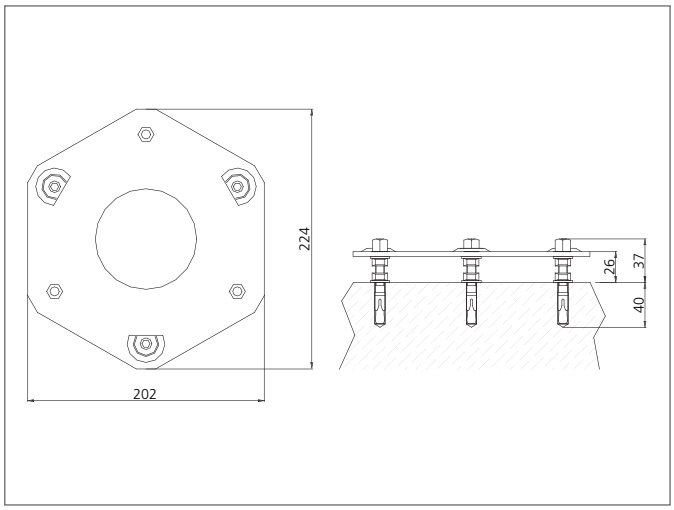

TECHNICAL INFORMATION (typ.)	+20°C, 24V DC
Mounting	3 mounting holes, Ø 8 mm
Operating principle	Base for mounting column
Size	202 x 224 x 37 mm (Dimensions)
Suitable for	Mounting columns FMC
Casing material	brass black
Scope of delivery	Single plate base, 3 steel anchor bolts, Fixing material