OGU 081 P3K-TSSL/V4A
Fork Light Barrier

- Light/dark switching
- Robust stainless steel casing for use in the pharma, beverage and food industry
- Integrated electronic module
- Sensitivity adjustable
- High operating frequency
- Bright ring LED
- High protection class
- 5-year warranty

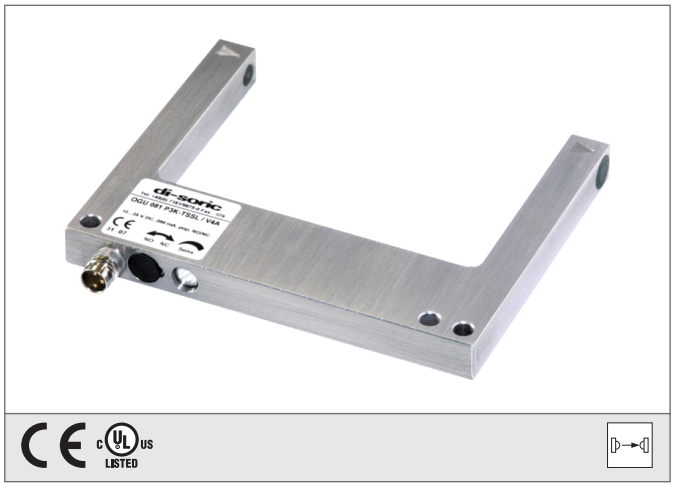

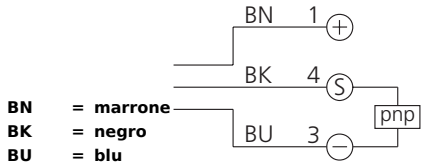

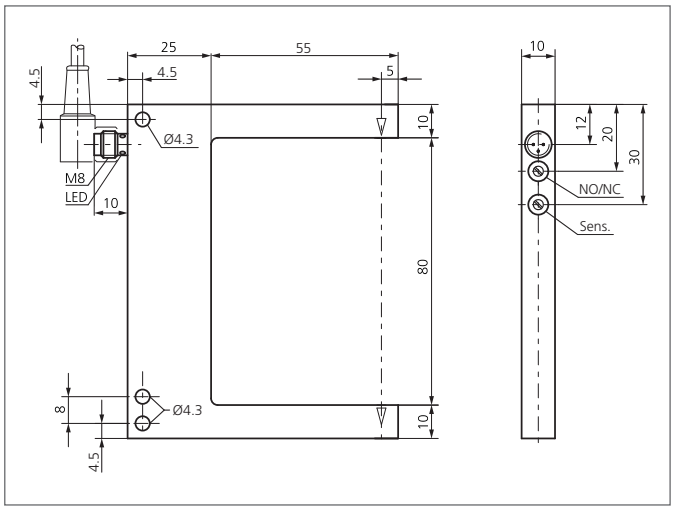

Safety instructions

The Instruments are not to be used for safety applications, in particular applications in which safety of persons depends on proper operation of the instruments.
These instruments shall exclusively be used by qualified personnel.