OGU 100 P3K-TSSL
Fork Light Barrier

- Light/dark switching
- Metal casing
- Integrated electronic module
- Sensitivity adjustable
- High operating frequency
- Bright ring LED
- High protection class
- 5-year warranty

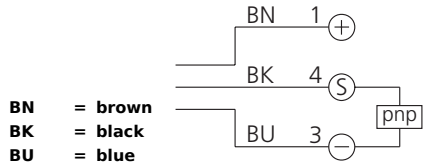

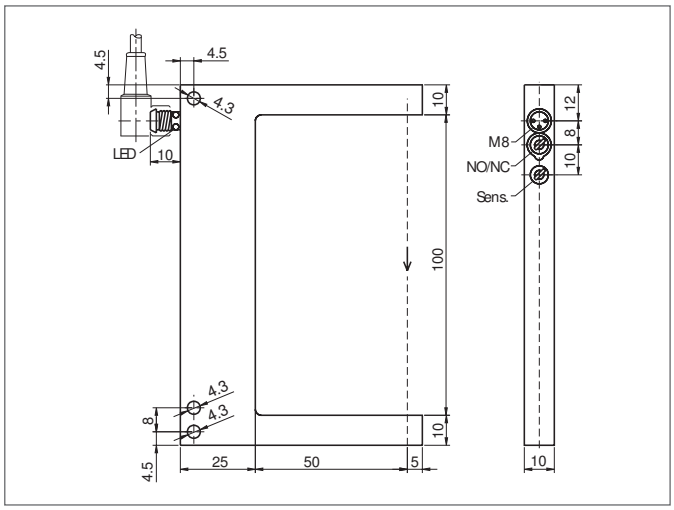

Safety instructions

The Instruments are not to be used for safety applications, in particular applications in which safety of persons depends on proper operation of the instruments.
These instruments shall exclusively be used by qualified personnel.