OGU 05/100 PN3K-TSSL
Optical Label Sensor

- Light/dark switching
- Metal casing
- Integrated electronic module
- Sensitivity adjustable
- High operating frequency
- Bright ring LED
- High protection class
- 5-year warranty

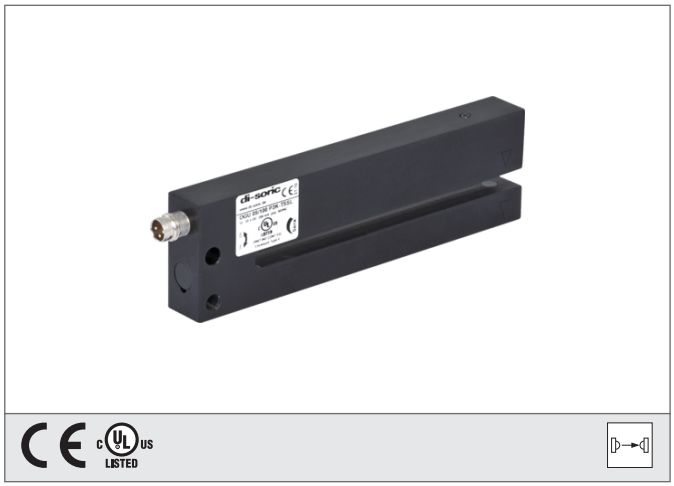

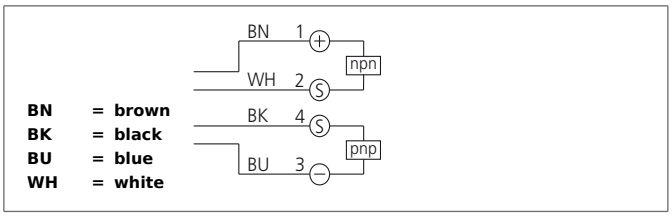

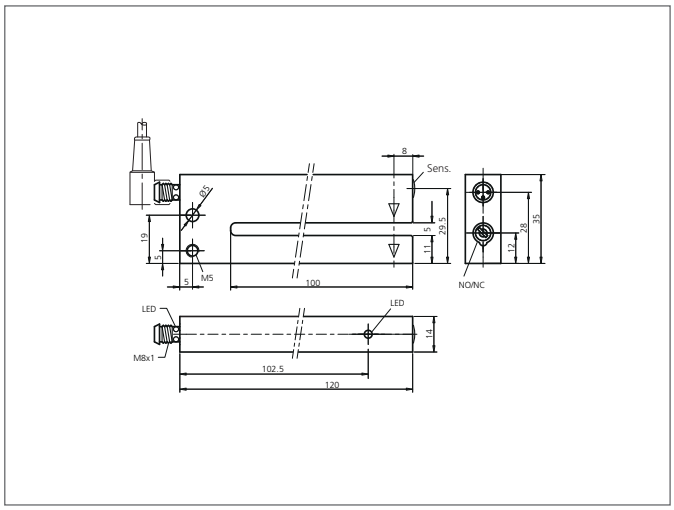

Safety instructions

The Instruments are not to be used for safety applications, in particular applications in which safety of persons depends on proper operation of the instruments.
These instruments shall exclusively be used by qualified personnel.

TECHNICAL INFORMATION (typ.)	+20°C, 24V DC
Operating principle	Optical
Evaluation	digital
Size	35 x 120 x 14 mm (Dimensions)
Design	fork
Fork opening	5 mm
Branch length inside	100 mm
Emitted light	Infrared, 880 nm, non-clocked
Service voltage	10 ... 35 V DC (Supply Class 2)
No-load current	< 45 mA
Sensitivity adjustment	potentiometer
Switching output	pnp+npn, 200 mA, NO/NC, switchable
Switching hysteresis	< 0,1 mm
Shock-/vibration load	10 ... 55 Hz / 1,0 mm / 30 g
Voltage drop	< 2,8 V
Switching frequency	10000 Hz
Ambient temperature, operation	-10 ... +60 °C
Ambient light immunity	10 kLx
Insulation voltage endurance	500 V
Protection class	IP 67
Protection degree	III, operation on protective low voltage
Casing material	Die-cast zinc black lacquered finish
Connection	Connector, M8, 4-poled
Connecting cable	TK ... /4