HS-K-12-12-A
Cross connector

- Highly flexible versatile mounting system
- All-purpose mounting
- Smooth adjustment
- Robust design

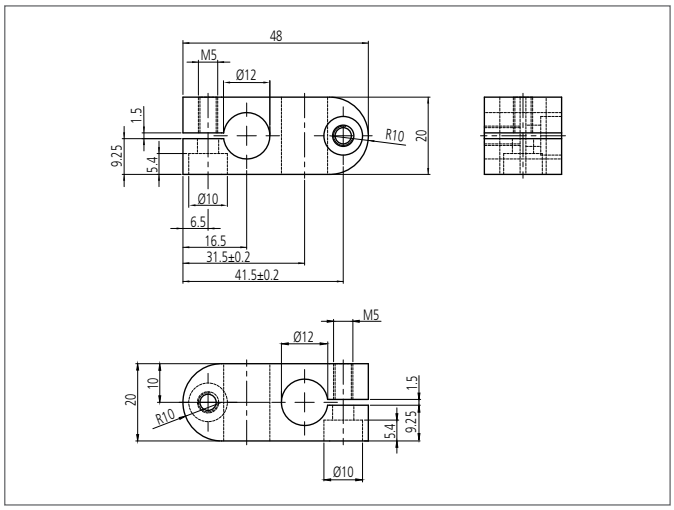

TECHNICAL INFORMATION (typ.)	+20°C, 24V DC
Dimension	Ø 12 / Ø 12 mm (Diameter assembly tap/drilling)
Casing material	Aluminium
Product series	System holder HS