MB-DIF-R-910
Diffusor

- Difúzní filtr
- Pro homogenní redukci sv tla a osv tlení
- Rychlá a snadná montáž

Safety instructions

The Instruments are not to be used for safety applications, in particular applications in which safety of persons depends on proper operation of the instruments.
These instruments shall exclusively be used by qualified personnel.

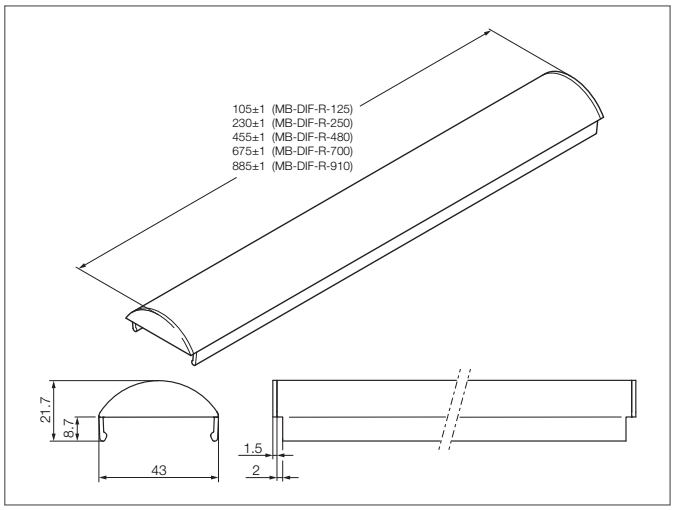

TECHNICAL INFORMATION (typ.)	+20°C
P ipevn ní	by clamping groove
Osv tlená oblast	43 x 885 mm
Vhodné pro	MB-N-91x ..., SB-RGB-91x ..., MB-RGBW-91x ...
Materiál	PC diffuse (Okno)
Hmotnost	112 g