BE-DOME100/70-RGB-T6
Dome light

- Three separated high-power channels in R/G/B
- Exceptionally homogenous and diffuse illumination
- Very compact design
- High light intensity
- Robust design

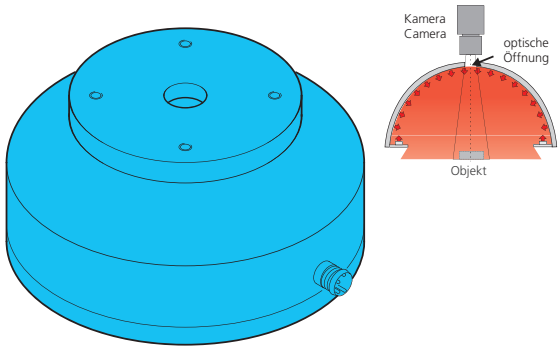

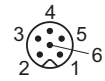

Blick auf Anschlussseite
View on connection position

PIN	Aderfarbe wire color	Funktion function
3	blau / blue	- blau / blue
5	grau / grey	- grün / green
6	rosa / pink	- rot / red
1	braun / brown	+ 24V

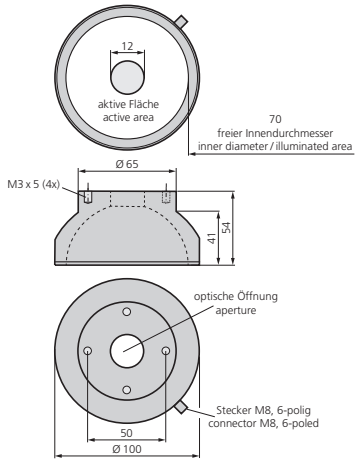

Safety instructions

The Instruments are not to be used for safety applications, in particular applications in which safety of persons depends on proper operation of the instruments.
These instruments shall exclusively be used by qualified personnel.

TECHNICAL INFORMATION (typ.)	+20°C, 24V DC
Size	Ø 100 mm (Diameter)
Illuminated area	Ø 70 mm
Number	30 LEDs
Light colour	RGB, 630 nm, 530 nm, 470 nm
Emission angle FWHM	120°
Service voltage	24 V DC
Power	1,7 W 70 mA, (24 V DC)
Current consumption	150 mA / 3 Colors (∑ < 3,6 W)
Ambient temperature, operation	0 ... +50 °C
Protection degree	III, operation on protective low voltage
Risk group (DIN EN 62471)	Free group
Casing material	Aluminium, plastics
Connection	Connector, M8, 6-poled